DECK RAIL POST TO RIM BOARD

CONNECTION DETAILS

According to the 2009 *International Residential Code for One and Two-Family Dwellings,* Table R301.5 (ICC, 2009), guardrails and handrails must be designed to withstand a single concentrated load of 200 pounds in any direction. A critical part of this connection is making a strong connection between the guardrail post and the rim board of the deck. In most cases, a 1/2" through-bolt or carriage bolt is used to make this connection. When installed as instructed in this bulletin, the ThruLOK System can replace 1/2" bolts, meeting the 200 pound design load for this part of the connection.

APPLICATIONS

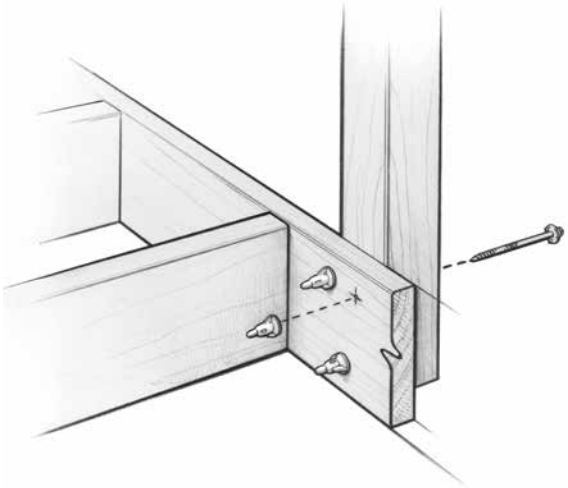

DECK POST TO SINGLE RIM JOIST

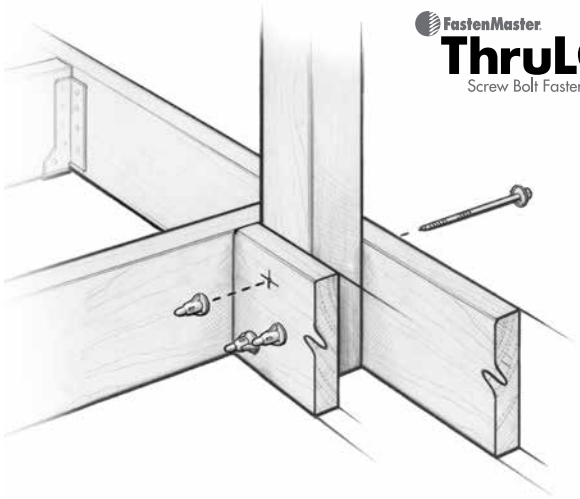

DECK POST TO DOUBLE RIM OR SINGLE RIM WITH BLOCKING

INSTALLATION INSTRUCTIONS

1. Choose the correct length (6 1/4" or 8") and fastening pattern for each post to rim application based on the illustrated conditions.
2. Mark the surface of the wood with the correct pattern.
3. If a flush mounted head is required, use a 1 1/4" spade bit to create a 1/4" deep recess in the rim or post.
4. Remove the pre-assembled ThruLOK nut from the screw and using a 1/2" drill on low speed/high torque setting, install the ThruLOK screw and washer into the outside face of the application until the screw is 1/4" to 1/8" from being flush.
5. Thread the ThruLOK nut onto the exposed threaded end of the fastener. Firmly twist on the nut by hand until snug.
6. Return to driving the screw in the remaining 1/4" to 1/8" until the washer and nut are firmly drawn together.
7. Make sure that the point of the ThruLOK fastener has passed the "MIN LINE" printed on the nut.
8. Repeat until all of the fasteners are installed correctly according to the specifications contained in this bulletin.

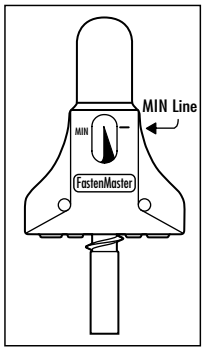

CONDITION 1 – EXTERIOR MOUNTED 4X4 POST TO 2X RIM

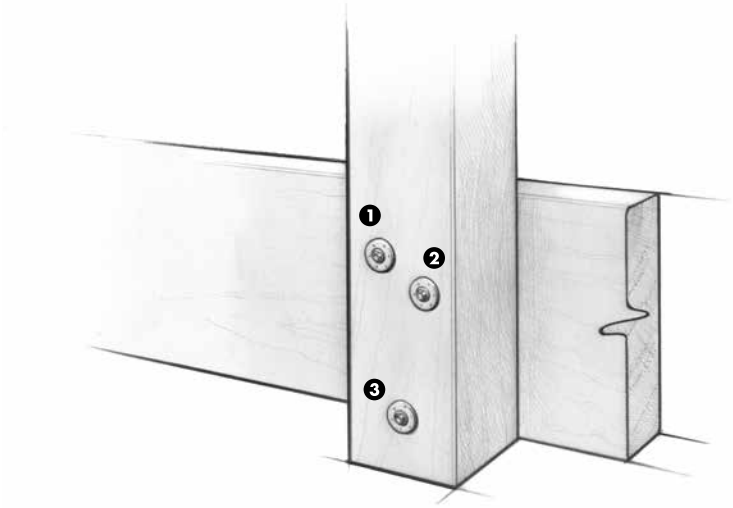

For this condition, use the 6¼" ThruLOK fastener

1. Install first screw 1" in from the edge of the post and 2" (+/- 1/4") from the top of the rim board
2. Install second screw 1" in from the other edge of the post and 3" (+/- 1/4") from the top of the rim board
3. Install third screw in the center of the post and 2" (+/- 1/4") from the bottom of the rim board

CONDITION 2 – INTERIOR MOUNTED 4X4 POST TO 2X RIM

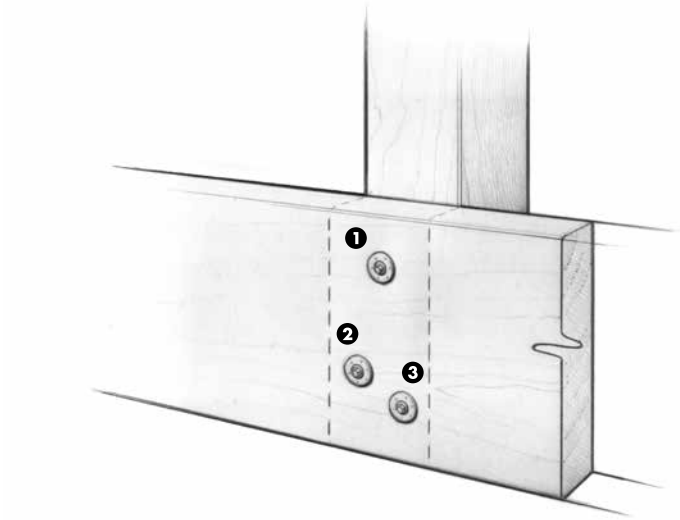

For this condition, use the 6 1/4" ThruLOK fastener

1. Install first screw in the center of the post and 2" (+/- 1/4") from the top of the rim board
2. Install second screw 1" in from the other edge of the post and 3" (+/- 1/4") from the bottom of the rim board
3. Install third screw 1" in from the edge of the post and 2" (+/- 1/4") from the bottom of the rim board

CONDITION 3 – INTERIOR MOUNTED 4X4 CORNER POST TO 2X RIM

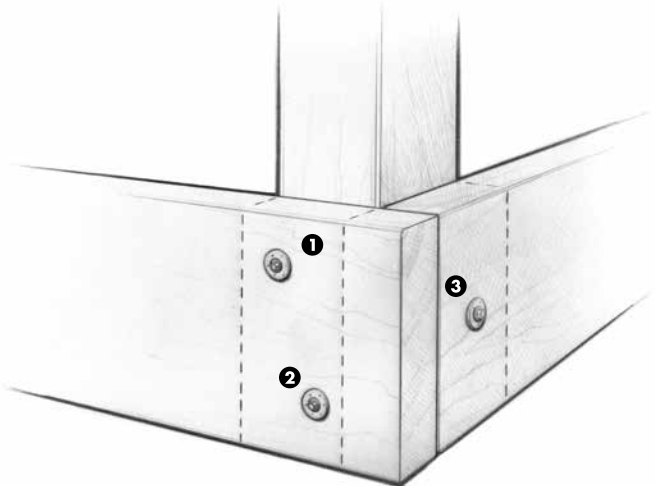

For this condition, use the 6 1/4" ThruLOK fastener

1. Install first screw 1" in from the edge of the post and 2" (+/- 1/4") from the top of the rim board
2. Install second screw 1" in from the other edge of the post and 2" (+/- 1/4") from the bottom of the rim board
3. Install third screw centered on both the post and the rim board

CONDITION 4 – EXTERIOR MOUNTED 4X4 POST TO DOUBLE 2X RIM

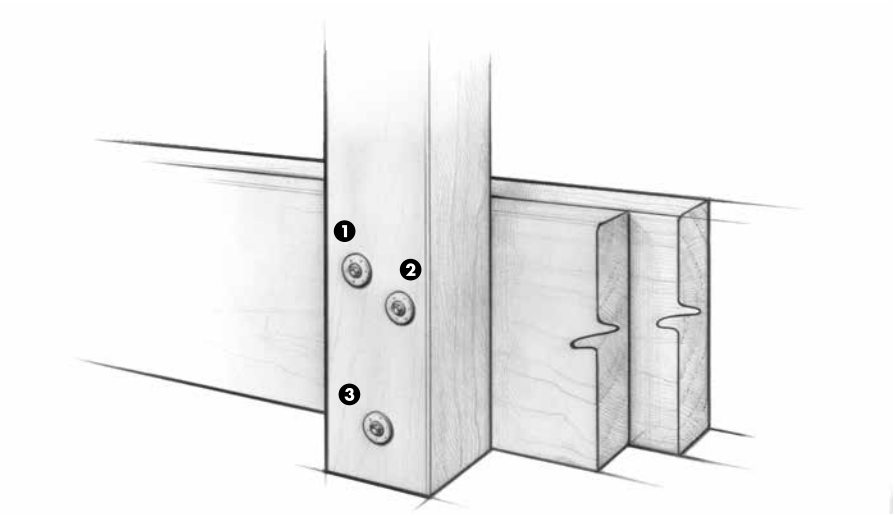

For this condition, use the 8" ThruLOK fastener

1. Install first screw 1" in from the edge of the post and 2" (+/- 1/4") from the top of the rim boards
2. Install second screw 1" in from the other edge of the post and 3" (+/- 1/4") from the top of the rim boards
3. Install third screw in the center of the post and 2" (+/- 1/4") from the bottom of the rim boards

CONDITION 5 – INTERIOR MOUNTED 4X4 POST TO DOUBLE 2X RIM

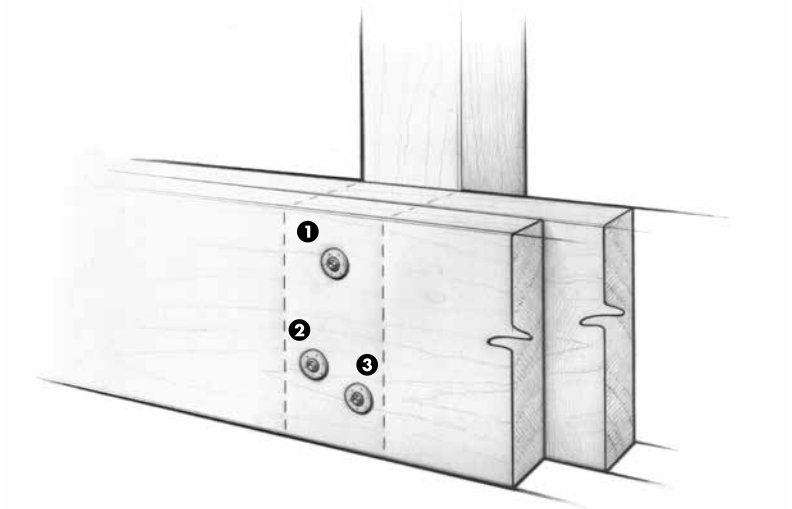

For this condition, use the 8" ThruLOK fastener

1. Install first screw in the center of the post and 2" (+/- 1/4") from the top of the rim boards
2. Install second screw 1" in from the edge of the post and 3" (+/- 1/4") from the bottom of the rim boards
3. Install third screw 1" in from the other edge of the post and 2" (+/- 1/4") from the bottom of the rim boards

CONDITION 6 – INTERIOR MOUNTED 4X4 CORNER POST TO DOUBLE 2X RIM

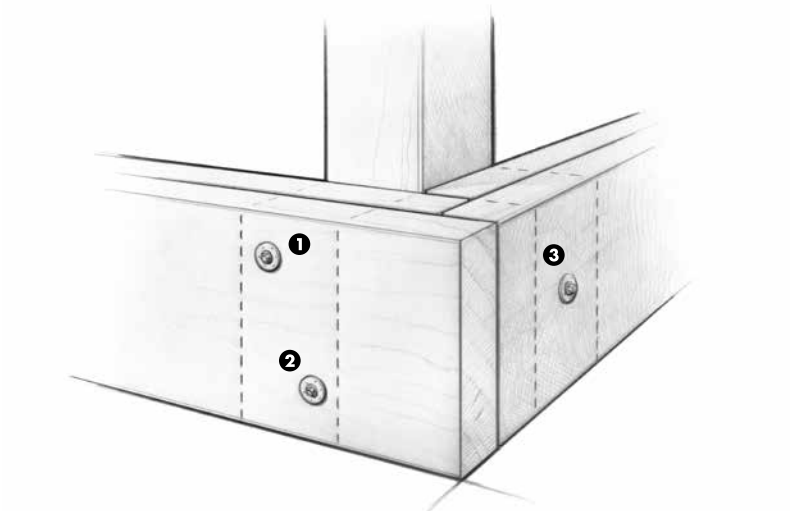

For this condition, use the 8" ThruLOK fastener

1. Install first screw 1" in from the edge of the post and 2" (+/- 1/4") from the top of the rim boards
2. Install second screw 1" in from the other edge of the post and 2" (+/- 1/4") from the bottom of the rim boards
3. Install third screw centered on both the post and the rim boards

CONDITION 7 – INTERIOR MOUNTED 4X4 POST TO 2X RIM WITH BLOCKING

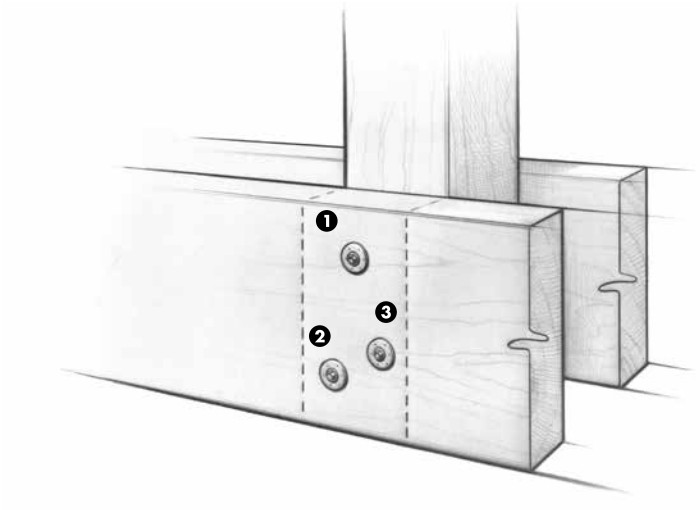

For this condition, use the 8" ThruLOK fastener

1. Install first screw in the center of the post and 2" (+/- 1/4") from the top of the rim board
2. Install second screw 1" in from the edge of the post and 2" (+/- 1/4") from the bottom of the rim board
3. Install third screw 1" in from the other edge of the post and 3" (+/- 1/4") from the bottom of the rim board

CONDITION 8 – INTERIOR MOUNTED 4X4 POST TO 2X RIM WITH SIDE BLOCKING

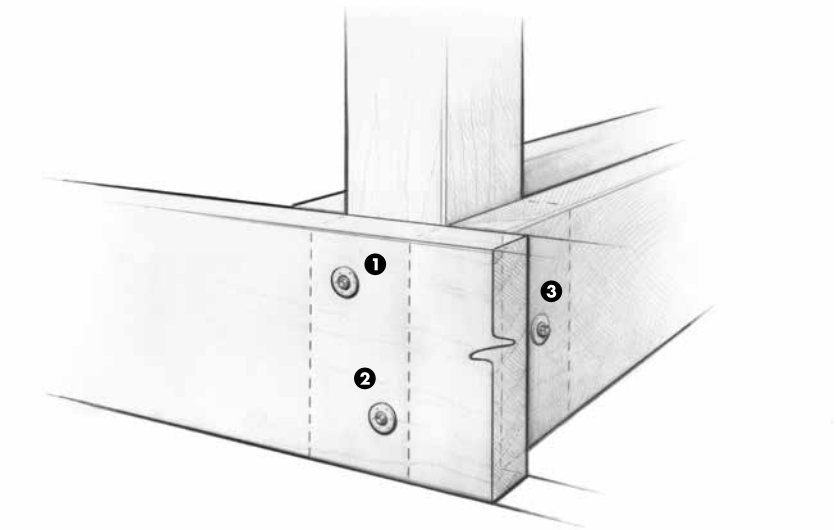

For this condition, use two, 6 1/4" and one, 8" ThruLOK fasteners

1. Install first 6 1/4" screw 1" in from the edge of the post and 2" (+/- 1/4") from the top of the rim board
2. Install second 6 1/4" screw 1" in from the other edge of the post and 2" (+/- 1/4") from the bottom of the rim board
3. Install 8" screw centered on both the post and the rim board

GENERAL FASTENING GUIDELINES

Design values used to create the fastening patterns in this bulletin were derived from individual fastener testing under ICC Acceptance Criteria AC233 and reported in ICC-ES Evaluation Report ESR #1078. Full scale testing of the deck rail post to deck frame connections were also conducted by an accredited third party to support these details.

The connection details shown in this bulletin apply specifically to 4x4 posts and 2x8, 2x10 or 2x12 rims and/or joists.

For different dimension lumber, wood species of lower density than Hem Fir (SYP and DF are higher density and therefore approved), or post heights greater than 37.5" off the top of the joists, please contact FastenMaster to determine the proper fastening solution.

ThruLOK is coated with mechanically applied zinc in accordance with ASTM B695, Class 55. This is compliant with the 2006 International Residential Code® (R319.3) and 2009 IRC (R317.1.3) for use in ACQ pressure treated wood.

As with other bolted connections using wet treated wood, the nut should be inspected and tightened if needed after initial drying period.

The connection details in this bulletin are an acceptable means of transferring the load from guard post to rim joist only. Additional blocking or hardware may be required to transfer loads from the rim to deck joists.

Fastening patterns assume the following: All components are used (screw, washer and nut), holes are not pre-drilled, and posts are loaded in an outward direction from the deck.

For questions regarding these or other connections, please contact FastenMaster Technical Support at www.fastenmaster.com or by calling 800·518·3569.

FMTECH-THRPOST (0114)

FastenMaster® and ThruLOK® are trademarks of OMG, Inc.
Copyright © 2014 OMG, Inc. All rights reserved.