FastenMaster

DeckLinx™

Hidden Deck Fastener

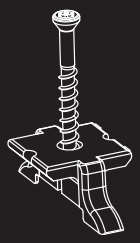

INSTALLATION INSTRUCTIONS

FM26191-ENG (1126)

1) Install The First Plank

- Install the outermost edge of the first board to the rim or ledger using top-down house/outside of deck fasteners.
- Recommended fasteners include Cortex® hidden fasteners and TrapEase color matched deck screws.
- Follow guidelines for the selected fastener.

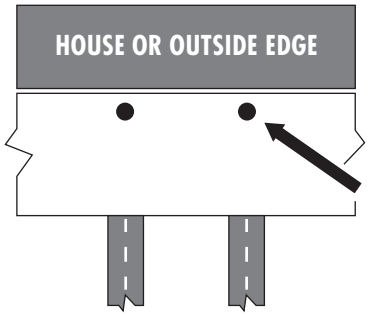

2) Position DeckLinx Fasteners

- Holding the collated strip of fasteners, insert the leading edge of the first DeckLinx fastener into the exposed groove of the decking. Center on the supporting joist below.

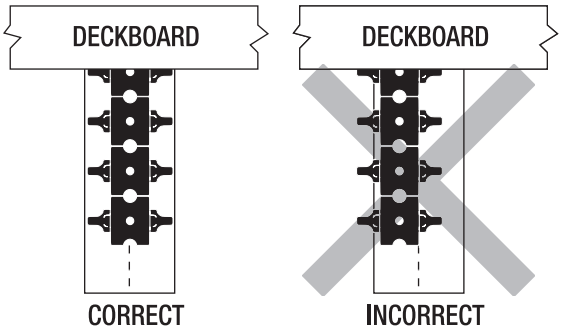

3) Begin Driving Screw

- Using an 18V cordless drill in the lowest speed setting, drive preset screw halfway into the joist. **DO NOT FULLY TIGHTEN.**
- For best results, apply downward pressure on the decking while driving the screw.
- Pull the remaining clips off the installed clip by bending upward to sever the collation.
- Install the remaining clips at each joist until the board is fully attached.

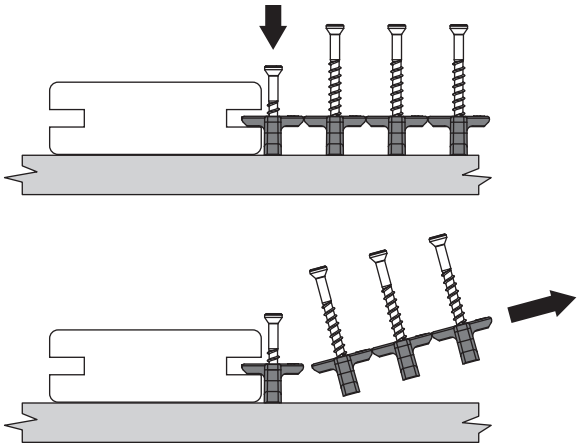

IMPORTANT: DO NOT OVERDRIVE THE CLIP. This will make next board entry difficult. Leaving the clip slightly loose will allow you to apply the next board and tighten previous row of clips.

▶

4) Install Next Board

- Slightly raise the outer edge of the next plank and slide it onto the installed clips.
- Tapping the board onto the clips may be required to achieve the desired gap.
  - Use a scrap piece of lumber against the side of the deck plank.
  - Do not use a hammer on the deck plank as damage may occur.
  - Do not force the boards as the clips are self-spacing.

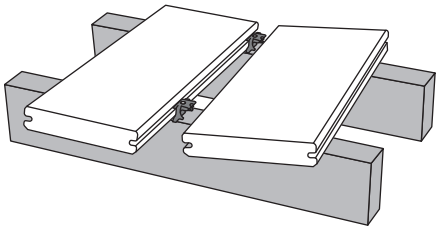

5) Complete Board Installation

- While applying hand pressure to outer edge of the deck board, install the next row of clips according to step 3.
- With the next board now installed, go back and fully tighten the previous row of clips.
- For best results and faster installation, use the clutch setting on the drill to set screws firm without overdriving.
- Repeat steps until deck is complete checking gaps for consistency throughout the build.
- To complete the installation, recheck all connections and tighten any loose clips.
- The last deck board will need to have the outside edge attached using Cortex. It may be necessary to rip the last deck board to fit.

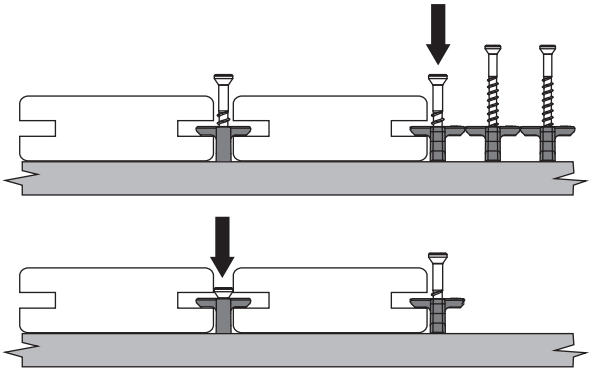

6) How to Install Butt Joints

- Where two deck board ends meet, fasteners must be installed on each side of the butt joint. A single fastener cannot be used to secure both board ends.
- Joists must be doubled up or blocking added for proper fastener attachment.
- Install fasteners as detailed in illustration. Note that the left and right clips have been placed approximately 1/8" offset from center to accommodate the legs of the clips.

WARNING: DO NOT USE ONLY 2 CLIPS AT BUTT JOINTS

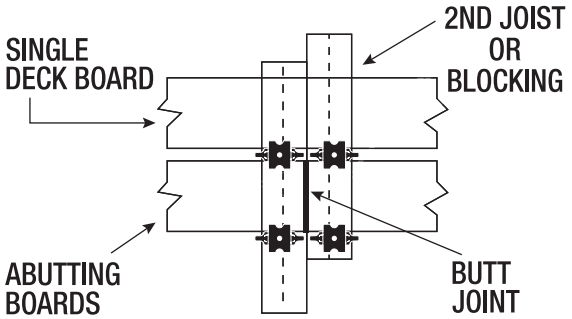

7) Removing and Replacing a Deck Board

- Remove the screws on both sides of board to be replaced using the provided T15 bit.
- Take care to not damage the deck boards on either side of the gap.
- You can now pry up your deck board without damage.
- Before installing a new board, clear all debris from the top of the exposed joist.
- To replace a board, install DeckLinx clips into one side of the exposed grooves. The clips should be left just slightly loose to facilitate installation of the subsequent deck board.
- Once the board is set, use Cortex fasteners to fasten the remaining edge of the replacement board.